CLASSROOM CAPSULES

EDITOR

Ricardo Alfaro
University of Michigan–Flint
Flint, MI 48502

Classroom Capsules consists primarily of short notes (1–3 pages) that convey new mathematical insights and effective teaching strategies for college mathematics instruction. Please submit manuscripts prepared according to the guidelines on the inside front cover to the Editor.

Pairs of Equal Surface Functions

Daniel Cass (dcass@sjfc.edu), St. John Fisher College, Rochester, NY 14618, and Gerald Wildenberg (gwildenberg@sjfc.edu), St. John Fisher College, Rochester NY 14618

When we heard the surprising fact that a slice of thickness t cut from a cylinder of radius R has the same lateral surface area as a slice of thickness t cut from a sphere of radius R (the slicing planes perpendicular to the axis of revolution), we immediately did the calculation to verify this fact. We simply used the familiar formula, derived in many calculus books, for the surface area of the figure formed by revolving a differentiable function $y = f(x)$ about the x-axis:

$$\text{Area} = 2\pi \int_a^b y\sqrt{1 + y'^2}.$$

For the two functions $y = R$ (whose rotation yields a cylinder) and $z = \sqrt{R^2 - x^2}$ (whose rotation yields a sphere), we found that both integrands are simply R. This is interesting in itself and confirms the fact stated above. It also implies the well known fact that the surface area of a slice of a sphere depends only on the thickness, not on where in the sphere the slice is taken. (This fact has fascinated others; see Segal [**1**] and Siu [**2**].)

Are there other pairs of smooth functions with the property of having equal areas of slices of the two surfaces of revolution? We describe below how to generate many such pairs, and explore some of their properties.

To begin, we seek pairs y, z of smooth nonnegative functions of x so that

$$y^2(1 + y'^2) = z^2(1 + z'^2). \tag{1}$$

If we let $p = (z^2 - y^2)/2$ and $q = (z^2 + y^2)/2$ (the choice motivated by an intermediate substitution for y^2 and z^2 and some algebra), then we find from (1) that

$$p'q' = -2p. \tag{2}$$

Furthermore, this process is reversible: if p and q satisfy (2) and $q \pm p \geq 0$ on some interval I, then $y = \sqrt{q - p}$ and $z = \sqrt{q + p}$ satisfy (1) on I. Since (2) involves q' but not q, the requirement that $q \pm p \geq 0$ on I can always be met by adding an

appropriate constant to q. Note that if p is chosen first, then only an integration is required to find a q so that p, q satisfy (2).

We now look at some families of pairs of equal-surface functions. From an initial choice of $p = ax^2$, we see from (2) that we must have $q = c - x^2/2$, so that $y = \sqrt{c - x^2/2 - ax^2}$ and $z = \sqrt{c - x^2/2 + ax^2}$. For convenience, we let $c = r^2$ and $k = a - 1/2$, giving the following pair of functions satisfying (1):

$$y = \sqrt{r^2 - (k+1)x^2}, \quad z = \sqrt{r^2 + k\,x^2}.$$

Note that taking $k = 0$ here gives the sphere-cylinder example. Other values of k give different surfaces. For example, when $k = -2$, we get a hyperboloid and an ellipsoid, $y^2 - x^2 = r^2$ and $z^2 + 2x^2 = r^2$. Figure 1 shows y and z rotated over their common domain, the interval $[-r/\sqrt{2}, r/\sqrt{2}]$. And for $k = -3/4$ we get two ellipsoids, $y^2 + (1/4)x^2 = r^2$ and $z^2 + (3/4)x^2 = r^2$. Figure 2 shows these functions y, z rotated over their common domain, in this case the interval $[-2r/\sqrt{3}, 2r/\sqrt{3}]$.

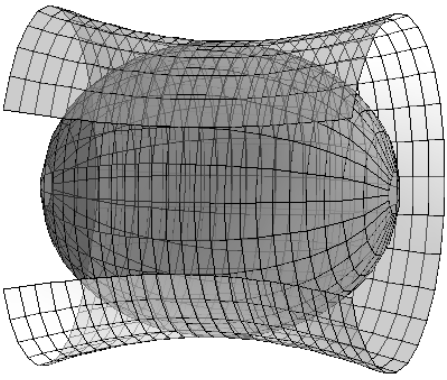

Figure 1. Hyperboloid-Ellipsoid.

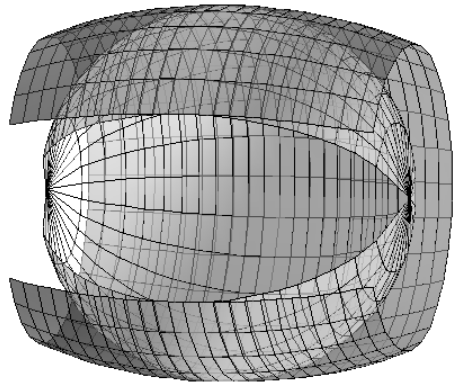

Figure 2. Cutaway view of two ellipsoids.

For an example involving the exponential function, we let $p = ae^{bx}$, in which case $q = c - 2x/b$, and we get the following solution of (1):

$$y = \sqrt{c - \frac{2x}{b} - ae^{bx}}, \quad z = \sqrt{c - \frac{2x}{b} + ae^{bx}}.$$

If, say, $a = c = 1$ and $b = -1$, then both are defined on $[0, \infty)$. Figure 3 shows these functions rotated over the interval $[0, 4]$.

To bring in the trig functions, we let $p = \sin x$, for which $q = c + 2\ln\cos x$ and obtain as a solution pair for (1)

$$y = \sqrt{c + 2\ln\cos x - \sin x}, \quad z = \sqrt{c + 2\ln\cos x + \sin x}.$$

For $c = 4$, the common domain of y and z is the interval $[-b,\ b]$ where $b = 1.3485+$. Figure 4 shows these functions rotated over the interval $[-1.348, 1.348]$.

The reader may yearn for simpler examples than those above. Alas, there is a limit to just how simple equal-surface pairs can be. We show that *no non-trivial polynomial solution pair satisfies* (1). For suppose that y and z are distinct nonnegative polynomials satisfying (1) on some interval, and let p and q be as before. Then it follows from

 © THE MATHEMATICAL ASSOCIATION OF AMERICA

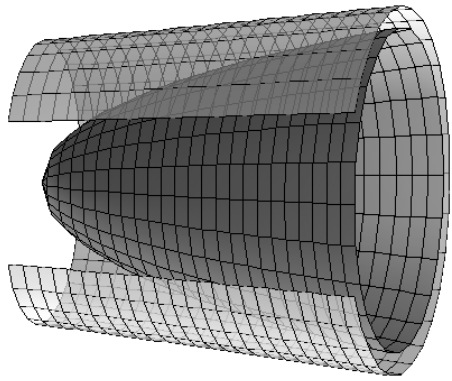

Figure 3. Cutaway view of $\sqrt{1+2x \pm 1/e^x}$ rotated.

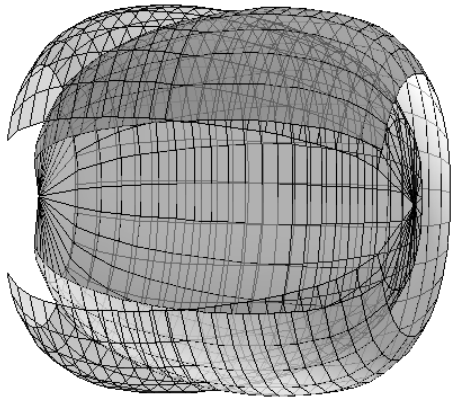

Figure 4. Cutaway view of $\sqrt{4+2\ln\cos x \pm \sin x}$ rotated.

(2) that $(\deg p - 1) + (\deg q - 1) = \deg p$, so $\deg q = 2$. Recall that $y^2 = q - p$ and $z^2 = q + p$. Since the leading coefficients of both y^2 and z^2 are positive, it follows that y and z are linear. (If $\deg(p) \geq 3$ then one of $q \pm p$ has negative leading coefficient.) But then (1) implies after some algebra that $y = z$.

For the sphere-cylinder example, as well as for our examples involving hyperboloids and ellipsoids, the pairs y, z solving (1) are square roots of polynomials. Are there other pairs of this type? Another way to pose this question is to ask for pairs p, q of polynomial solutions to (2). As in the argument above concerning polynomial pairs, we have $\deg q' = 1$. So we may write $q' = 2a(x+b)$, which using (2) gives the following (separable) differential equation for p:

$$\frac{p'}{p} = \frac{-1}{a(x+b)}.$$

This has general solution $p = c(x+b)^{-1/a}$, which is a polynomial iff $-1/a = n$, a positive integer. Integrating q' gives $q = a(x+b)^2 + k$, and since $a = -1/n$ we see that any polynomial pair p, q solving (2) has the form

$$p = c(x+b)^n, \quad q = \frac{-1}{n}(x+b)^2 + k.$$

Taking $n = 1$ leads to two spheres. For $n = 2$ we have a shifted version of the choice $p = cx^2$ treated in our earlier example. More generally, for any n, if k is chosen to make $q \pm p \geq 0$ on an interval I, then $y = \sqrt{q - p}$ and $z = \sqrt{q + p}$ are a pair of solutions to (1) for which the radicands are polynomials. Conversely, all pairs whose squares are polynomials which satisfy (1) are of this form.

There are several possible places in the undergraduate curriculum where our discussion might well be utilized. Whether the lateral area of a cylinder or a similarly dimensioned sphere has a larger area is a provocative way to challenge student intuition when such surfaces are first discussed in a calculus class. The same question could be posed about our ellipsoid-hyperboloid example. A project for a student might be to make various choices for z and then investigate (1) as a nonlinear differential equation in for y. Use of some ODE software might be appropriate, since general solutions are typically unavailable.

References

1. Arthur C. Segal, A Note on the Surface of a Sphere, *The Two-Year College Mathematics Journal* (1982) 63–64.
2. Man-Keung Siu, On the Sphere and Cylinder, *The College Mathematics Journal* (1984) 326–328.

A Tricky Linear Algebra Example

David Sprows (david.sprows@villanova.edu), Villanova University, Villanova, PA

In this note, we develop a result on linear combinations from a vector space that starts out with a little trick. Before the class begins, the instructor writes the number 65 on a piece of paper, then in class, the instructor claims to have the psychic ability to predict sums in advance. The numbers from 1 to 25 are then written consecutively in a 5-by-5 array, as shown below in (A). A student is asked to pick any five numbers from this array with the only restriction being that no two of these numbers can lie in the same row or column. For example, the numbers selected might be the five numbers given in bold face in (B). The student is then asked to add these numbers together and as the student is announcing the result, the instructor shows the class the paper with the number 65 written on it.

(A)

1	2	3	4	5
6	7	8	9	10
11	12	13	14	15
16	17	18	19	20
21	22	23	24	25

(B)

1	**2**	3	4	5
6	7	8	**9**	10
11	12	13	14	15
16	17	18	19	**20**
21	22	**23**	24	25

Of course, the reason this trick works is that the procedure given above will always lead to the sum of 65. A discussion of this trick leads to some natural questions. For example, does this trick extend to values other than 1 through 25? That is, if we write out the numbers 1 through n^2 consecutively in an n-by-n array, will it always be the

© THE MATHEMATICAL ASSOCIATION OF AMERICA